FILE NO. AA-CD-803-02

NOTES:

① MAT'L: COPPER
PLATING: ELECTRO TIN (.0003 MIN)
② TIN-PLATED BRASS FUNNEL FERRULE
③ NYLON INSULATION (COLOR CODED RED)

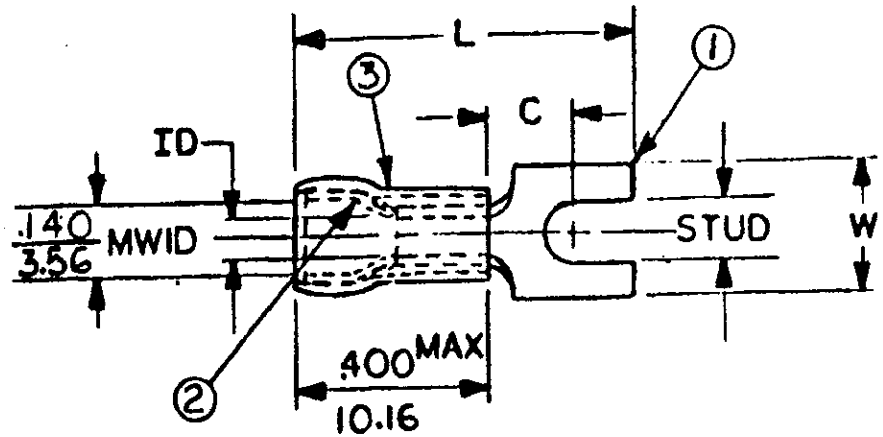


STUD SIZES: (±.005)

02 = .094
04 = .119
06 = .146
08 = .173
10 = .198
14 = .265
56 = .328
38 = .390

"UL" LISTING #E32244
"CSA" LISTING #18689

WIRE SIZE: 22 – 18 AWG
.25 – 1.5 MM²

ALL DIMENSIONS = INCHES / MM

(MWID) = DENOTES MAXIMUM WIRE INSULATION DIAMETER

| PART NUMBER | "W" ±.010 | "C" MIN. | "L" MAX. | "ID" MIN. | | | AVAILABLE STUD SIZES | STOCK THICKNESS | |
|---|---|---|---|---|---|---|---|---|---|
| AA-8109- | .187 / 4.75 | .183 / 4.65 | .727 / 18.47 | .054 / 1.37 | | | 02, 04 | .031 ±.001 / .79 | |
| | | | | | | | | | |
| | | | | | | | | | |
| | | | | | | | | | |
| | | | | | | | | | |

| DIMENSIONAL TOLERANCES UNLESS OTHERWISE SPECIFIED | | | REFERENCE | SCALE: NTS | DATE | TITLE: |
|---|---|---|---|---|---|---|
| FRAC. | DEC. | ANG. | | DRWN. BY: JJ | 11·8·84 | SPADE TONGUE TERMINAL AVIKRIMP 800-SERIES |
| ± | ± | ± | | CHKD. BY: GZ | 11·14·84 | |
| | | | | APPRD. BY: | | |

ETC molex INCORPORATED

DWG. NO. A CUSTOMER DWG