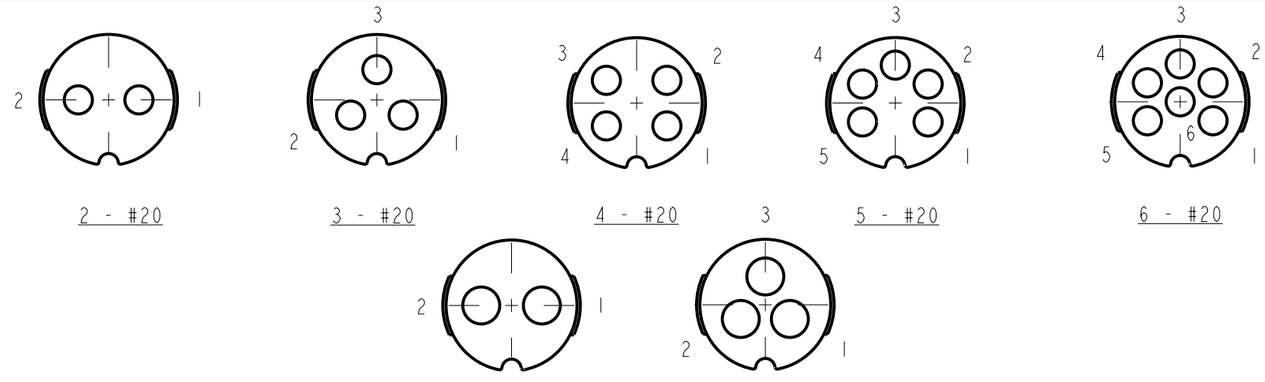

MATERIAL:

CONNECTOR HOUSING:
CONNECTOR SHELL- THERMOPLASIC POLYMER
GLASS FIBER, FLAME RETARDANT
CONNECTOR INTERIOR- THERMOPLASIC RUBBER
LOCKING DISC: THERMOPLASIC POLYMER
GLASS FIBER, FLAME RETARDANT

CONTACT ARRANGEMENTS

SHOWN ARE REAR VIEWS OF
FEMALE PANEL CONNECTORS

NOTE:

1. LOCKING DISC ASSEMBLED TO HOUSING.

E N 3 PH F

SERIES

CONNECTOR TYPE
PH-PANEL SOCKET HOUSING
(FOR SOLDER & CRIMP CONTACT)

NUMBER OF CONTACTS
2,3,4,5,6

GENDER
F - FEMALE

CONTACT SIZE
16 - #16
AVAILABLE IN
2 AND 3 PIN ONLY
20 - #20

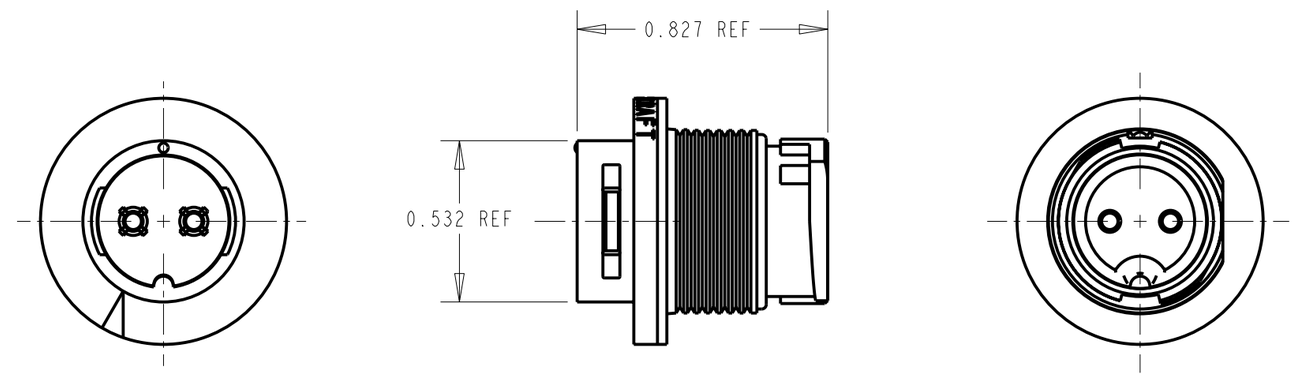

CUSTOMER DRAWING

REV	ECO NUMBER	DATE	BY	APVD
B	22232	4-24-98	SG	RB
A	ECO #21183	10-8-96	MM	RB

REVISIONS

☆ STAR SYMBOL DENOTES CRITICAL DIMENSION

UNLESS OTHERWISE SPECIFIED

1. ALL DIMENSIONS IN INCHES
   -TWO PLACE DECIMALS ±0.01
   -THREE PLACE DECIMALS ±0.005
   -ANGLES ±1°
   -ALL DIA. CONCENTRIC WITHIN 0.005 T.I.R.
2. FEATURES ON THE SAME CENTERLINE MUST BE ALIGNED WITHIN ±0.002
3. REMOVE ALL BURRS

DO NOT SCALE DRAWING

THIS DRAWING DESCRIBES A DESIGN CONSIDERED PROPRIETARY IN NATURE, DEVELOPED AND MANUFACTURED BY SWITCHCRAFT INC. AND IS RELEASED ON A CONFIDENTIAL BASIS FOR IDENTIFICATION PURPOSES ONLY.

SIZE	WIDTH	MULT	LBS/M	TEMPER

FINISH
SPEC No.

MATERIAL
SPEC No.

FIRST USED ON

SCALE 2:1

DATE DRAWN	BY	CHKD	APVD
8-Oct-96	MM	RB 10-8-96	RB 10-8-96

Switchcraft®

SHEET 1 OF 1

NAME
PANEL SOCKET

PART No.
EN3PH_F

REV
B

Pro/Engineer CAD File B