Alle Rechte vorbehalten/ *All rights reserved*

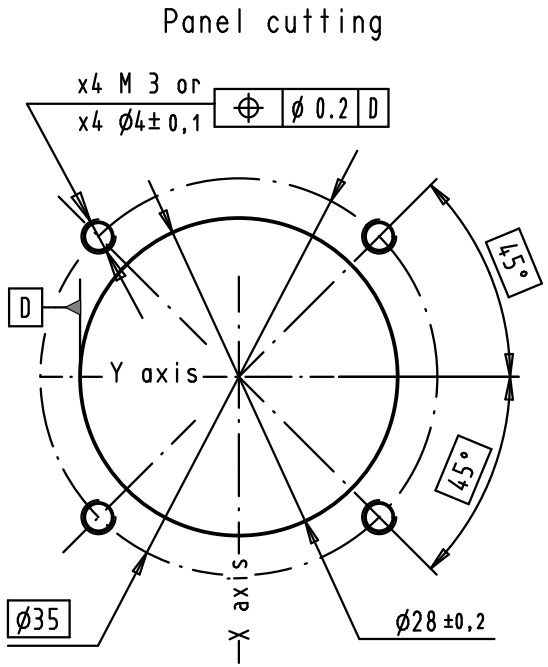

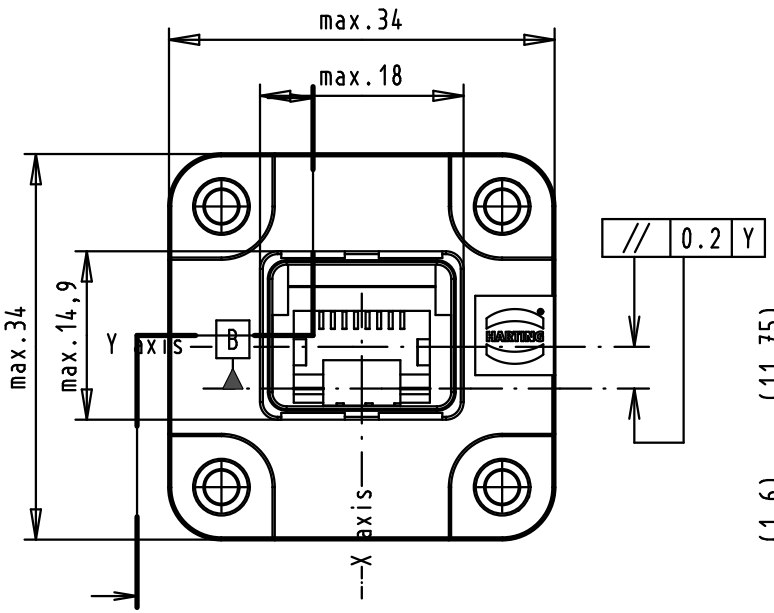

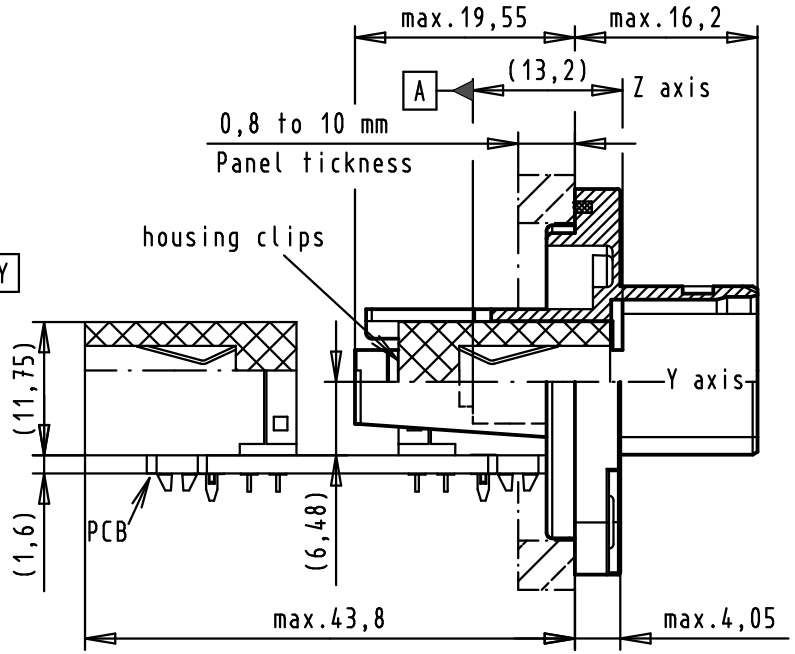

Connector pitchs on panel = 35 mm
Receptacle mating face acc. to
IEC 61076-3-106 - variant 04

jack references A and B
according to IEC 60603-7
the jack is located in the housing
in the X,Y,Z axis after locking clips.
The assembled PC Board is delivered to customer
not locked in the housing.

Screwing by x4 M3 screws with torque 0.5 N.m
with flat washer under the screw .

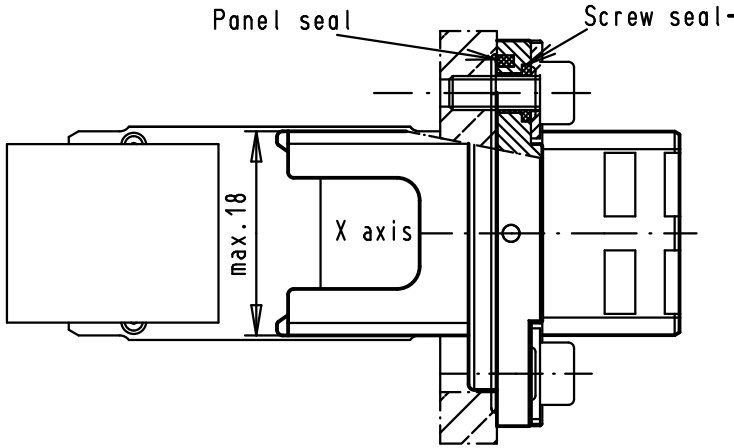

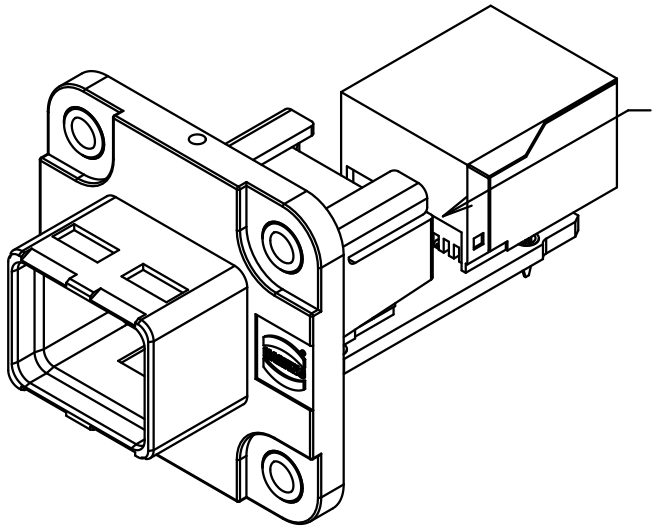

				Dat.	Name
			Detail.	19/dec/05	JFB
33812	23/oct/06	JFB	Insp.		
33468	10/may/06	JFB	Stand.		
33405	20/dec/05	BD			
33289	19/dec/05	BD			
Mod.	Dat.	Name			

All Dim. in mm
Orig. Size DIN A 3

HARTING EURL
F-95972 Paris

Push-pull RJ Industrial
Easy install IP 67 receptacle
and right angled jack 8 poles

Maßstab/ *Scale* 1,5:1

TB 09 45 245 1130

Sub.

Blatt/ *Page* 1/1